Connector

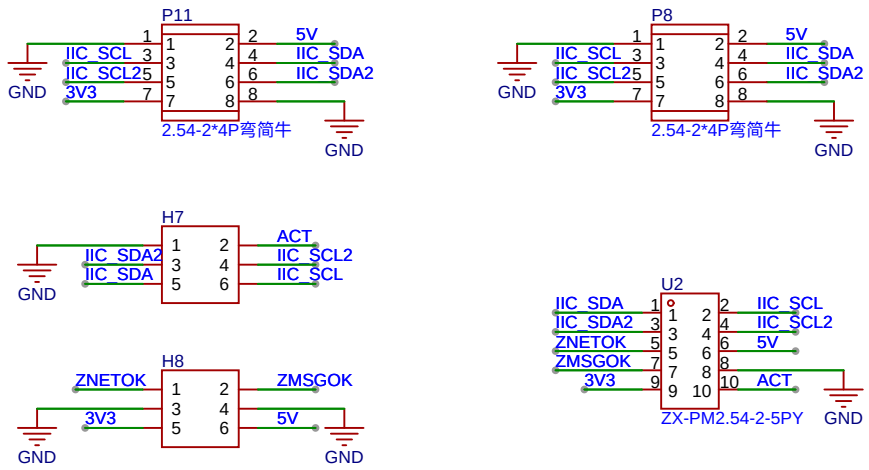

NOTE: for board connection use C29779976 extended pins and add to your BOM

carletz	DOMIX - Domotic module for smart home & co		Create at	2026-02-07	Drawn	carletz
			Update at	2026-02-09	Reviewed	carletz
	Version	Size	Page 1 Total 1	Schematic	M1 - Middle Module V1.0		
	1	A4	EasyEDA	Board	V1 - CORE - MIDDLE V1.0	Page	Board